Outline Drawing (2-Way Divider)

Models	Weight
PS-J000-2S	3.9 oz [110.6 g]
PS-JA00-2S	
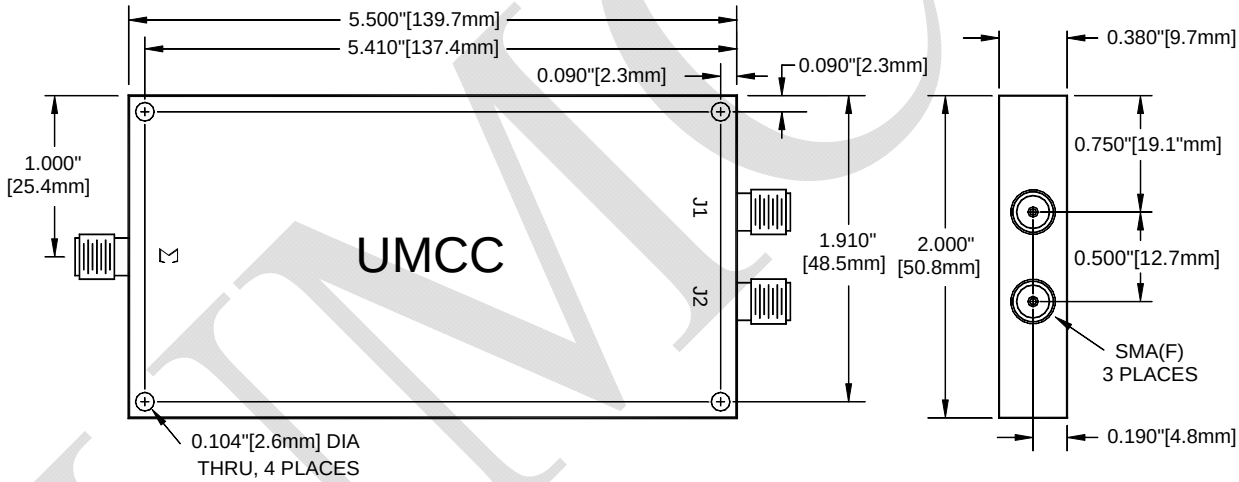
Fig. 1